Bestware
Expertise in Stainless Steel



Series Catalog

Expertise in Stainless Steel

METERING FAUCET

PREMIER SOLUTION PROVIDER OF ONE-STOP STAINLESS COMMERCIAL FAUCETS

www.bestware-stainless.com

BESTWARE Hardware Production Co., Ltd.

Add: Block 8, No.6, Jianda Nan Road, Jiangmen, Guangdong, China

Email: business@bestware-stainless.com after-sales@bestware-stainless.com

WhatsApp: +86 18929047065 Tel: +86 750 3108801

Wechat: +86 18929047065

Website YouTube WhatsApp Wechat

2025 V2.0

CONTENTS

METERING FAUCET

Deck Mount 01

Wall Mount 03

Product Advantages

Since its establishment, Bestware has always adhered to the principle of "solving industry pain points through product selling points", creating more value for customers. Below is an overview of our unique selling points.



Metering Faucet

Pain Points	Selling Points
Brass Contains Lead, Relatively Soft	SUS304 (Lead-free), Perfect for High-wear Public Use
No Flow Time Adjustment, Unstable Flow	Adjustable Water Flow (6-16 Seconds) with Smooth, Stable Flow
Hard to Press, Inconvenient for Public Use	Easy to Press, Suitable for All Ages, Especially Seniors and Kids

Our Commitments

97%+ Product Satisfaction Upon Receipt by Customers

100% 304/316 Stainless Steel (Unless Specified Otherwise)

100% Product Qualification Rate at Factory Shipment

100% Customer Complaint Resolution Rate



Take Bestware for a spin, and it'll be your go-to forever!

DECK MOUNT

Expertise in Stainless Steel
BESTWARE
PREMIER SOLUTION PROVIDER OF ONE-STOP STAINLESS COMMERCIAL FAUCETS

Key Parts	Features
Material	SUS304 (lead-free), perfect for high-wear public use
Water Flow Time	Adjustable water flow (6-16 seconds) with smooth, stable flow
Kind	Easy to press, ideal for all ages, especially seniors and children
Valve Core Lifepan	Up to 200,000+ cycles



Expertise in Stainless Steel
BESTWARE
PREMIER SOLUTION PROVIDER OF ONE-STOP STAINLESS COMMERCIAL FAUCETS

DECK MOUNT

100% SUS304 WETTED PARTS



DECK MOUNT

Expertise in Stainless Steel

BESTWARE

PREMIER SOLUTION PROVIDER OF ONE-STOP STAINLESS COMMERCIAL FAUCETS



100% SUS304 WETTED PARTS

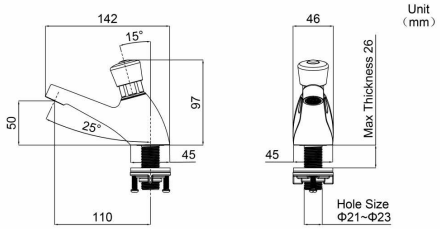

BWPT6PB/BWPT16PB

Deck Mount Metering Faucet with Push Button

Attributes	Details
Water Flow Time	Factory preset 6 or 16 seconds, adjustable from 6-16 seconds
Neoperl Aerator Water Flow	Unlimited Flow
Hole Size	Φ21-23 mm



100% SUS304 WETTED PARTS

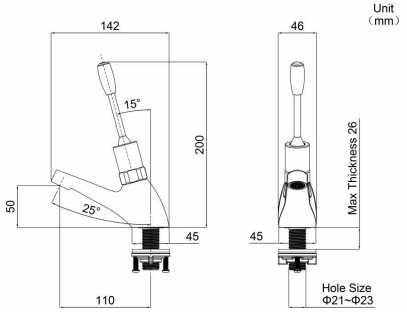

BWPT6L/BWPT16L

Deck Mount Metering Faucet with Lever Handle

Attributes	Details
Water Flow Time	Factory preset 6 or 16 seconds, adjustable from 6-16 seconds
Neoperl Aerator Water Flow	Unlimited Flow
Hole Size	Φ21-23 mm

Expertise in Stainless Steel

BESTWARE

PREMIER SOLUTION PROVIDER OF ONE-STOP STAINLESS COMMERCIAL FAUCETS

WALL MOUNT



100% SUS304 WETTED PARTS

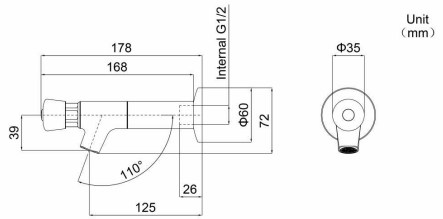

BWBT6PB/BWBT16PB

Wall Mount Metering Faucet with Push Button

Attributes	Details
Water Flow Time	Factory preset 6 or 16 seconds, adjustable from 6-16 seconds
Neoperl Aerator Water Flow	Unlimited Flow
Hole Size	G1/2



100% SUS304 WETTED PARTS

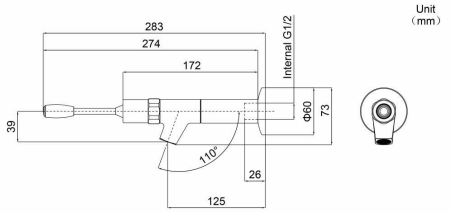

BWBT6L/BWBT16L

Wall Mount Metering Faucet with Lever Handle

Attributes	Details
Water Flow Time	Factory preset 6 or 16 seconds, adjustable from 6-16 seconds
Neoperl Aerator Water Flow	Unlimited Flow
Hole Size	G1/2