European Mini Style Deck Mount

Model No.: ED200C

- **75%** Less Strain
- **3X** Rinsing Efficiency
- **50%** Faster Installation
- **5X** Longer Lifespan

100% SUS304 WETTED PARTS

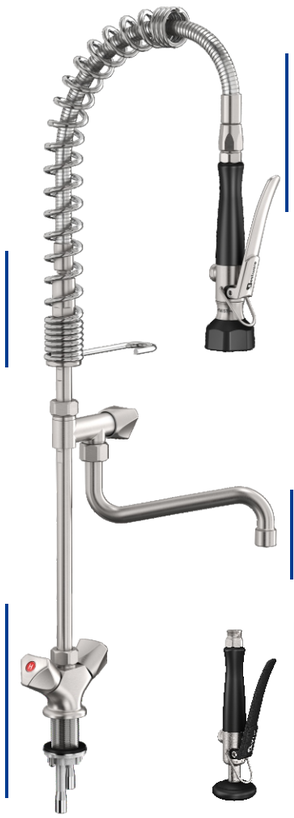

Hose

- Heat-resistant up to 95 °C
- Dual 360° swivel head and universal joint
- Tensile strength up to 155 kgs

Stainless Steel Slow-opening Valve Core

- Tested for over 200,000 switch cycles (under high-temperature and high-pressure)
- 50% lighter operation (compared to similar products)

Stainless Steel Spray Valve

Patented Dual-function Model

- Rotary switch (powerful and large-area washing)
- Reduces at least 75% muscle strain

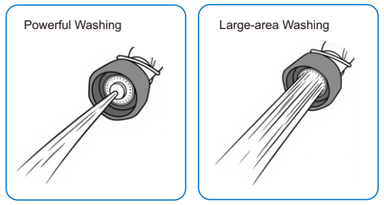

Single-function Model

- Single powerful washing
- Reduces at least 75% muscle strain



Website YouTube WhatsApp Wechat

BESTWARE Hardware Production Co., Ltd.
Block 8, NO. 6, Jianda Nan Rd., Jiangmen, Guangdong, China 529000 **www.bestware-stainless.com**

Email: business@bestware-stainless.com Tel: +86 750 3108801
WhatsApp: +86 18929047065 Wechat: +86 18929047065

Bestware Expertise in Stainless Steel

PRE RINSE FAUCET

Premier Solution Provider of One-stop Commercial Stainless Steel Faucets

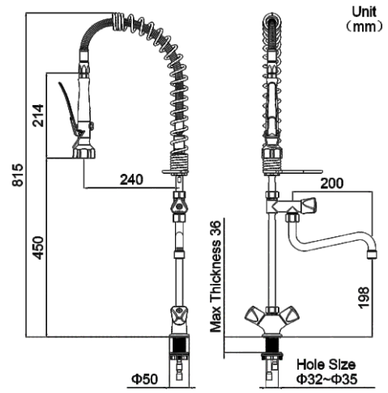

Attributes	Details
Model No.	ED200C
Style	European Mini Style
Body Mount	Single Hole Deck Mount
Hole Size	Φ32-35 mm
Height	815 mm
Body Material	304 Stainless Steel
Valve Core	304 Stainless Steel Slow-opening
Spray Valve	Available in Stainless Steel Dual-function or Single-function Options
Hose	Stainless Steel 360° Rotating and Universal Ball Joint (925 mm)
Overhead Spring	304 Stainless Steel
Temperature Control	Dual-handles Dual-control Hot and Cold Adjustment
Add-on Swing Nozzle	304 Stainless Steel, 200 mm (≈ 7.87")
Neoperl Aerator Water Flow	Available in 2.11 GPM(8 LPM) or 3.96 GPM(15 LPM) Options
Wall Bracket	/
Temperature Max	95°C(203°F)
Pressure Max	2.5 Mpa (250 Bar)
Life Span	200,000+ Cycles

Website YouTube WhatsApp Wechat

BESTWARE Hardware Production Co., Ltd.
Block 8, NO. 6, Jianda Nan Rd., Jiangmen, Guangdong, China 529000 **www.bestware-stainless.com**

Email: business@bestware-stainless.com Tel: +86 750 3108801
WhatsApp: +86 18929047065 Wechat: +86 18929047065

2025 V1.0