Affordable Luxury Lite Mini Style Deck Mount

Model No.: BQH106C

- **75%** Less Strain
- **3X** Rinsing Efficiency
- Single-handed Temperature Control
- Ideal Choice for Open Kitchens

99%
SUS304
WETTED PARTS

Stainless Steel Spray Valve

Patented Dual-function Model

- Rotary switch
  (powerful and large-area washing)
- Reduces at least 75% muscle strain

Powerful Washing

Large-area Washing

Hose

- Heat-resistant up to 95 °C
- Dual 360° swivel head
- Tensile strength up to 155 kgs

Single-function Model

- Single powerful washing
- Reduces at least 75% muscle strain

Single Powerful Washing

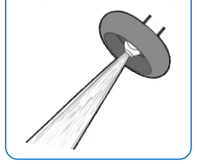

Wanhai Brand Single-lever Thermostatic Mixing Ceramic

- Tested for over 200,000 switch cycles
  (under high-temperature and high-pressure)

Website YouTube WhatsApp Wechat

BESTWARE Hardware Production Co., Ltd.
Block 8, NO. 6, Jianda Nan Rd., Jiangmen, Guangdong, China 529000 **www.bestware-stainless.com**
Email: business@bestware-stainless.com Tel: +86 750 3108801
WhatsApp: +86 18929047065 Wechat: +86 18929047065

Bestware
PRE RINSE FAUCET
Premier Solution Provider of One-stop Commercial Stainless Steel Faucets

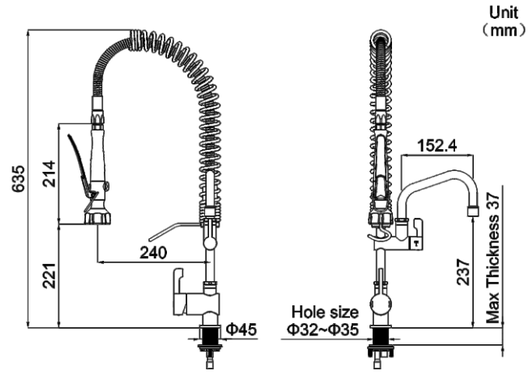

Attributes	Details
Model No.	BQH106C
Style	Affordable Luxury Lite
Body Mount	Single Hole Deck Mount
Hole Size	Φ32-35 mm
Height	635 mm
Body Material	304 Stainless Steel
Valve Core	Single-lever Thermostatic Mixing Ceramic (Wanhai)
Spray Valve	Available in Stainless Steel Dual-function or Single-function Options
Hose	Stainless Steel 360° Rotating (625 mm)
Overhead Spring	SUS304
Temperature Control	Single-handle Dual-control Hot and Cold Adjustment
Add-on Swing Nozzle	304 Stainless Steel, 6" = 152.4 mm
Neoperl Aerator Water Flow	Available in 2.11 GPM(8 LPM) or 3.96 GPM(15 LPM) Options
Temperature Max	95°C(203°F)
Pressure Max	2.5 Mpa (25 Bar)
Life Span	200,000+ Cycles

Website YouTube WhatsApp Wechat

BESTWARE Hardware Production Co., Ltd.
Block 8, NO. 6, Jianda Nan Rd., Jiangmen, Guangdong, China 529000 **www.bestware-stainless.com**
Email: business@bestware-stainless.com Tel: +86 750 3108801
WhatsApp: +86 18929047065 Wechat: +86 18929047065

2025 V1.0